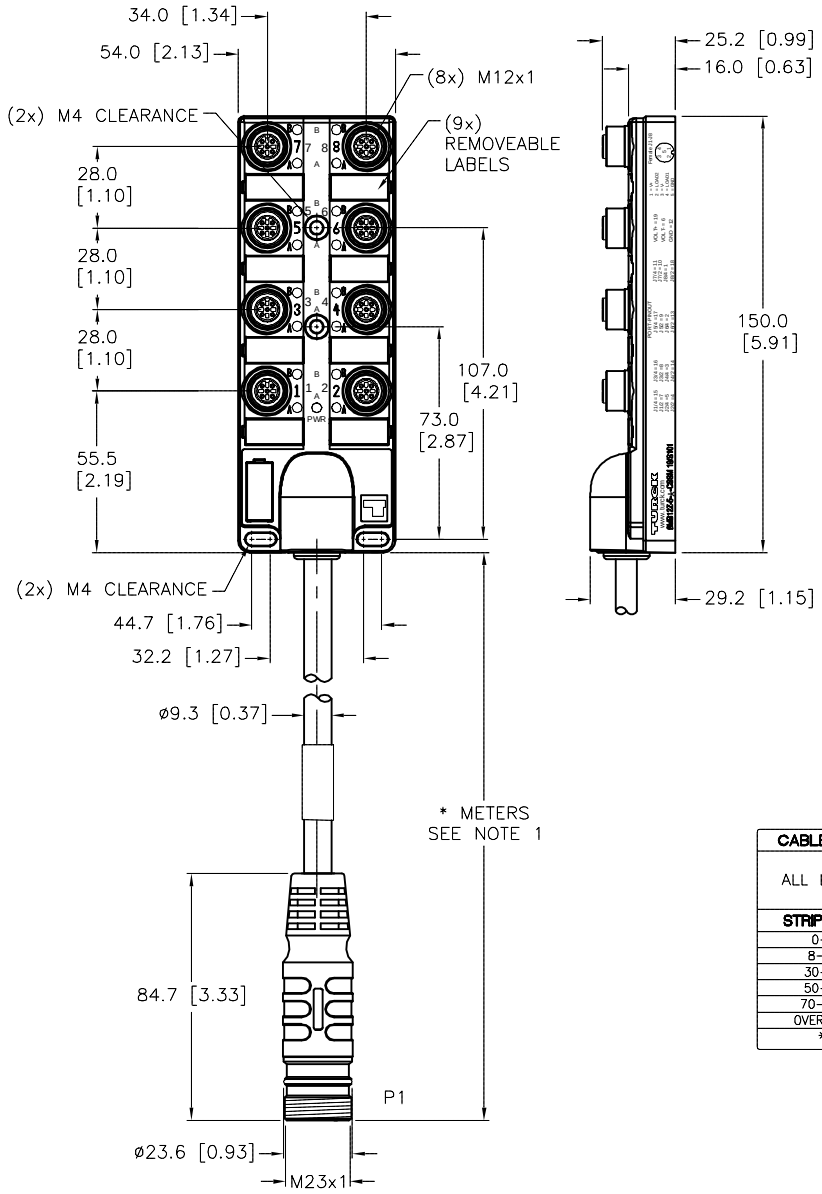

FEMALE END VIEW (J1–J8)

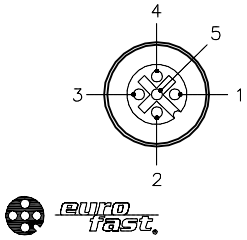

MALE END VIEW (P1)

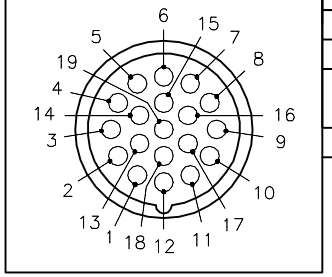

SPECIFICATIONS

NUMBER OF CONDUCTORS [AWG]	3x18 AWG, 16x22 AWG
CONDUCTOR INSULATION MATERIAL	POLYESTER ELASTOMER
OUTER JACKET MATERIAL/COLOR	TPE/YELLOW
HOUSING MATERIAL/COLOR	NYLON/BLACK
RECEPTACLE MATERIAL/PLATING (J1–J8)	BRASS/NICKEL
CONTACT CARRIER MATERIAL	NYLON (J1–J8), PBT (P1)
CONTACT MATERIAL/PLATING	BRASS/GOLD
COUPLING NUT MATERIAL/PLATING (P1)	BRASS/NICKEL
MOLD MATERIAL/COLOR (P1)	TPU/BLACK
O–RING MATERIAL	FKM/FPM
OPERATING VOLTAGE [V]	60 VDC
OPERATING CURRENT [A]	2.0 AMPS/SIGNAL, 9.0 AMPS TOTAL
PROTECTION CLASS	IP67, ONLY WHEN ALL RECEPTACLES ARE COVERED WITH PLUGS OR CONNECTED
OPERATING TEMPERATURE	–40°C to +85°C (–40°F to +185°F)

WIRING DIAGRAM

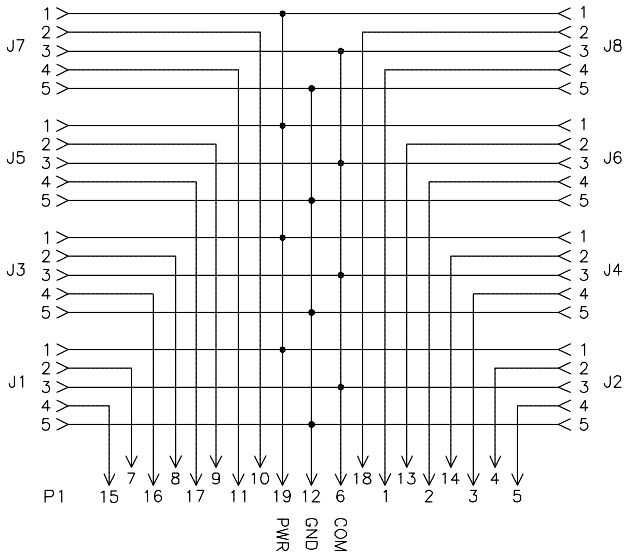

CABLE LENGTH	TOLERANCE *
ALL LENGTHS	+ 4% (OR 50mm) OF LENGTH – 0% (OR 0mm) OF LENGTH WHICHEVER IS GREATER
STRIP LENGTH	**TOLERANCE ***
0–7mm	±0.5mm
8–29mm	±1.0mm
30–49mm	±2.0mm
50–69mm	±3.0mm
70–100mm	±4.0mm
OVER 100mm	±5.0mm
* UNLESS OTHERWISE SPECIFIED	

SOURCE DRAWING - FOR REFERENCE ONLY

NOTES:

1. "*" INDICATES CABLE LENGTHS IN METERS. CONTACT TURCK TO ORDER SPECIFIC LENGTH.

2. "/S101" DESIGNATES FLEXLIFE–20 CABLE.

REV	DESCRIPTION	BY	DATE	ECO NO.
F	ADDED CE LOGO TO LABEL	ER	08/30/18	66305

RELATED DOCUMENTS
1.
2.
3.
4.

3RD ANGLE PROJECTION

THIS DRAWING IS CONFIDENTIAL AND THE PROPERTY OF TURCK INC. USE OF THIS DOCUMENT WITHOUT WRITTEN PERMISSION IS PROHIBITED.

TURCK
3000 CAMPUS DRIVE
MINNEAPOLIS, MN 55441
1–800–544–7769
(763) 553–7300
(763) 553–0708 fax
www.turck.us

MATERIAL: SEE SPECIFICATIONS

FINISH: SEE SPECIFICATIONS

ALL DIMENSIONS DISPLAYED ON THIS DRAWING ARE FOR REFERENCE ONLY

CONTACT TURCK FOR MORE INFORMATION

DRFT: RDS | DATE: 06/19/12
APVD: T.S. | SCALE: 1=2.7

UNIT OF MEASUREMENT
MILLIMETER [INCH]
DO NOT SCALE THIS DRAWING

DESCRIPTION: 8MB12Z–5–*–CSSM 19/S101

IDENTIFICATION NO.

REV: F

FILE: 777029340

SHEET 1 OF 1